SUSPENSION, REAR SHOCK & MOUNTING - Z26S4D92AN/AH/BN/BH (C750589)

RZR - RZR PRO S4 ULTIMATE (R01) - Z26S4D92AN/AH/BN/BH

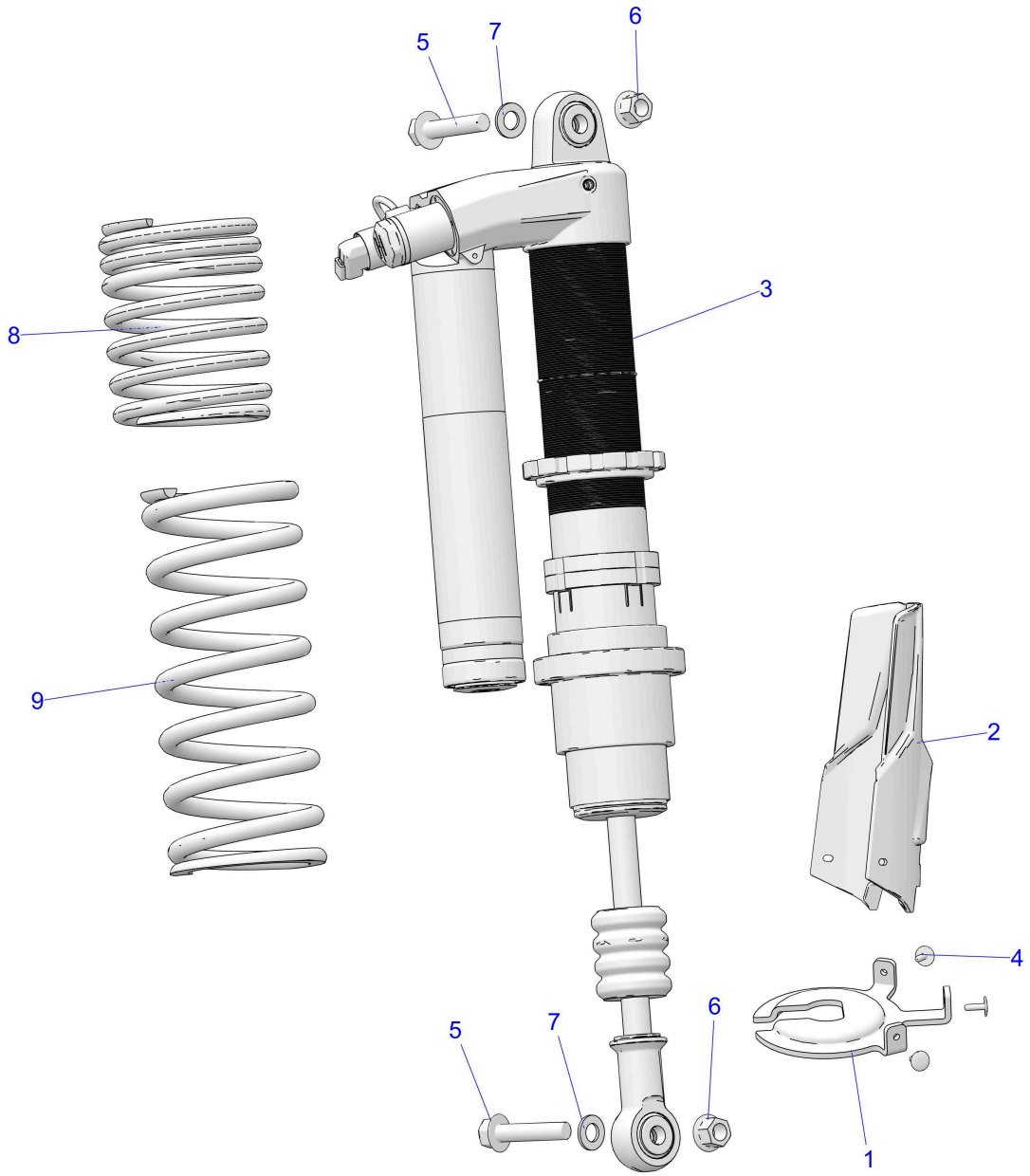

© 2024 Polaris Industries Inc.

C750589

Reference #	*Part#*	*Description*	*Quantity*
1	5270086	RETAINER-SPRING,3.75",STAMPED	2
2	5454105-070	GUARD-SHOCK ROD,RR,BLK	2
3	7046345	SHOCK-REAR,DX,MP	2
4	7621467	RVT-3/16(.251-.375)ST-ST-LF-B	6
5	7521335-65	SCR-HXFL-M14X2.0X65 10.9 ZFB	4
6	7547981	NUT-HXFL-M14X2X 10 ZFB SPC	4
7	7557237	WSHR-FLAT-M14X2.5 ZTB	4
8	7046405-737	SPR-150-300# 10FL 3.79-ID,SBLU [INDIAN SKY BLUE][AN/BN]	2
8	7046405-458	SPR-150-300# 10FL 3.79-ID,BLK [BLACK][AH/BH]	2
9	7046273-737	SPR-250# 16FL 3.79-ID,S.BLUE [INDIAN SKY BLUE][AN/BN]	2

9	7046273-458	SPR-250# 16FL 3.79-ID,BLK [BLACK][AH/BH]	2

Copyright 1996-2026 Polaris Industries U.S.A All rights reserved.